Control and shut-off butterfly valves, full bore

BFC W1/GS series, Δp = 16 bar, welding / welding, GOST, DN 300-800, full bore

Body	DN 300-500 Steel, P235GH (1.0345)
	DN 600-800 Steel P355NL1 (1.0566)
Disc	DN 300-800 Stainless steel, GX5CrNiMo19-11-2 (1.4408)
Seat	DN 300-800 1.4542 + HCr plating
Stem	DN 300-800 Stainless steel, X3CrNiMoN27-5-2 (1.4460)
Stem seal	DN 300-800 Graphite
Bearing	DN 300-800 PTFE + AISI 316 net
Operation	DN 300-800 Valve is equipped with manual gear

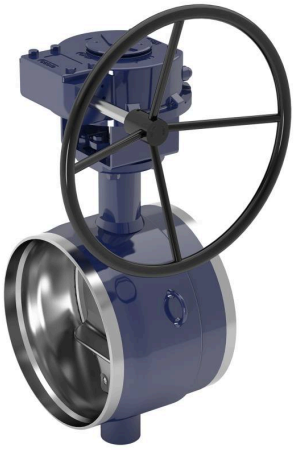

Operation conditions

Body:	PN 25
Trim:	Δp = 16 bar
Temperature:	-40 °C – +250 °C
Leakage rate:	A (EN 12266-1)

DN 300-800

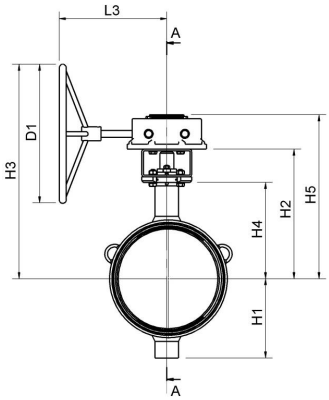

DN 300-800

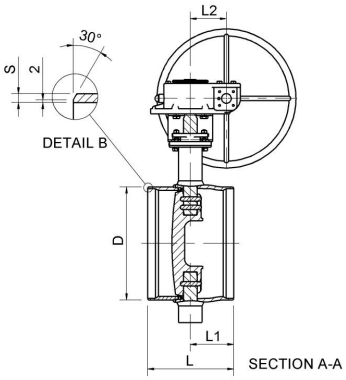

DN	PN	Product no.	D	D1	H1	H2	H3	H4	H5	L	L1	L2	L3	S	kg
300	16	BFC300W1/GS	325	400.0	247	435	683	315	537	270	110	105	331	7	88.0
350	16	BFC350W1/GS	377	400.0	255	445	693	325	547	290	134	105	331	8	101.0
400	16	BFC400W1/GS	426	500.0	285	467	772	347	590	310	157	130	393	8	136.0
450	16	BFC450W1/GS	478	400.0	330	499	754	379	622	330	153	130	386	8	183.0
500	16	BFC500W1/GS	530	400.0	360	528	783	408	651	350	153	130	386	9	222.0
600	16	BFC600W1/GS	630	500.0	440	575	887	450	728	390	184	140	419	11	357.0
700	16	BFC700W1/GS	720	400.0	495	625	884	501	784	430	203	182	441	12	504.0
800	16	BFC800W1/GS	820	500.0	581	733	1068	573	911	470	226	209	483	12	864.0

Copyright © Vexve Oy
All rights reserved.