Control and shut-off butterfly valves, full bore

BFC F1 series, Δp = 16 bar, flange / flange, DN 300-800, full bore

Body	DN 300-500 Steel, P235GH (1.0345)
	DN 600-800 Steel P355NL1 (1.0566)
Disc	DN 300-800 Stainless steel, GX5CrNiMo19-11-2 (1.4408)
Seat	DN 300-800 1.4542 + HCr plating
Stem	DN 300-800 Stainless steel, X3CrNiMoN27-5-2 (1.4460)
Stem seal	DN 300-800 Graphite
Bearing	DN 300-800 PTFE + AISI 316 net
Operation	DN 300-800 Valve is equipped with manual gear
Flanges	EN 1092-1 Available PN 16

Operation conditions

Body:	PN 25
Trim:	Δp = 16 bar
Temperature:	-20 °C – +250 °C
Leakage rate:	A (EN 12266-1)

DN 300-800

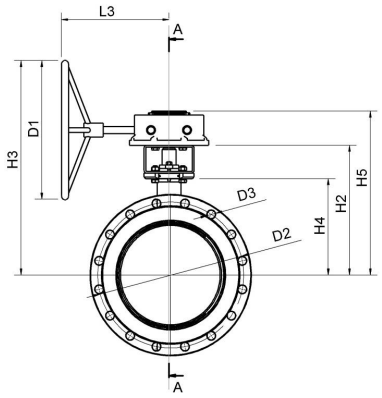

DN 300-800

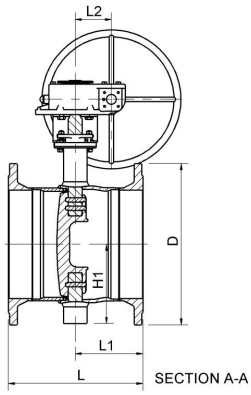

DN	PN	Product no.	D	D1	D2	D3	H1	H2	H3	H4	H5	L	L1	L2	L3	kg
300	16	BFC300F1	460	400.0	410.0	26.0	247	435	683	315	537	430	190	105	331	131.0
350	16	BFC350F1	520	400.0	470.0	26.0	255	445	693	325	547	458	218	105	331	165.0
400	16	BFC400F1	580	500.0	525.0	30.0	285	467	772	347	590	484	244	130	393	216.0
450	16	BFC450F1	640	400.0	585.0	30.0	330	499	754	379	622	500	238	130	386	277.0
500	16	BFC500F1	715	400.0	650.0	33.0	360	528	783	408	651	522	239	130	386	344.0
600	16	BFC600F1	840	500.0	770.0	36.0	440	575	887	450	728	570	274	140	419	541.0
700	16	BFC700F1	910	400.0	840.0	36.0	495	625	884	501	784	642	309	182	441	694.0
800	16	BFC800F1	1025	500.0	950.0	39.0	581	733	1068	573	911	690	336	209	483	1105.0

Copyright © Vexve Oy
All rights reserved.