Steel ball valves, reduced bore

105/25 series, PN 25, flange / welding, EN (DIN), DN 65-300, reduced bore

Body	DN 65-300 Steel, P235GH (1.0345)
Ball	DN 65-300 Stainless steel, X5CrNi18-10 (1.4301)
Ball seal	DN 65-300 PTFE+C
Stem	DN 65-300 Stainless steel, X8CrNiS18-9 (1.4305)
Stem seal	DN 65-300 FPM
Operation	DN 65-250 With zinc-plated steel handle
	DN 300 Without handle
Flanges	EN 1092-1 Available PN 10, 16, 25, 40

Operation conditions

-20 °C – +200 °C
Below -20 °C contact manufacturer
Lowest allowed ambient temperature -40 °C

Leakage rate A (EN 12266-1)

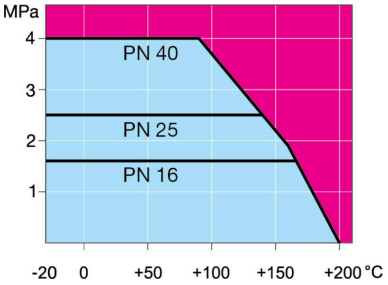

Not for steam

DN 65-150

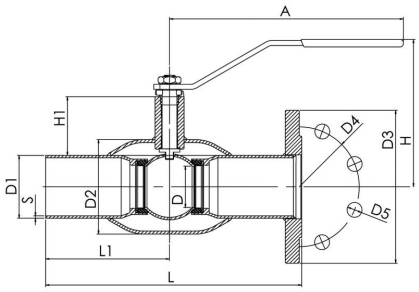

DN 200-300

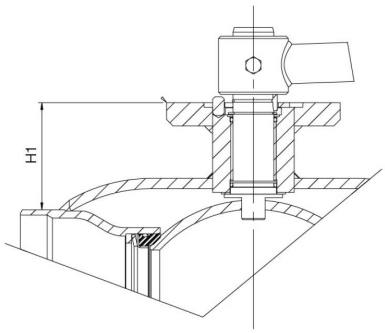

DN	PN	Product no.	A	D	D1	D2	D3	D4	D5	H	H1	L	L1	S	kg
65	25	105065/25	278	50	76.1	101.6	185.0	145.0	18.0	157	62	310	150	2.9	7.3
80	25	105080/25	278	65	88.9	121.0	200.0	160.0	18.0	170	68	310	150	3.2	9.3
100	25	105100/25	279	80	114.3	139.7	235.0	190.0	22.0	216	101	340	163	3.6	14.0
125	25	105125/25	400	100	139.7	177.8	270.0	220.0	26.0	251	101	340	163	4	22.7
150	25	105150/25	600	125	168.3	219.1	300.0	250.0	26.0	272	107	360	175	4.5	27.0
200	25	105200/25	870	150	219.1	273.0	360.0	310.0	26.0	282	92	415	200	4.5	53.0
250	25	105250/25	1200	200	273.0	355.6	425.0	370.0	30.0	350	108	540	265	5	94.0
300	25	105300/25		250	323.9	457.0	485.0	430.0	30.0		133	560	277.8	5.6	137.0

Copyright © Vexve Oy
All rights reserved.