Shut-off butterfly valves, full bore

BFS W2 series, Δp = 25 bar, welding / welding, EN (DIN), DN 300-800, full bore

Body	DN 300-500 Steel, P235GH (1.0345)
	DN 600-800 Steel P355NL1 (1.0566)
Disc	DN 300-800 Stainless steel, GX5CrNiMo19-11-2 (1.4408)
Seat	DN 300-800 1.4542 + HCr plating
Stem	DN 300-800 Stainless steel, X3CrNiMoN27-5-2 (1.4460)
Stem seal	DN 300-800 FPM
Bearing	DN 300-800 PTFE + AISI 316 net
Operation	DN 300-800 Valve is equipped with manual gear

Operation conditions

Body:	PN 25
Trim:	Δp = 25 bar
Temperature:	-40 °C – +200 °C
	Below 0 °C contact manufacturer
Leakage rate:	A or B (EN 12266-1)
	Depending on requirement

Not for steam

DN 300-800

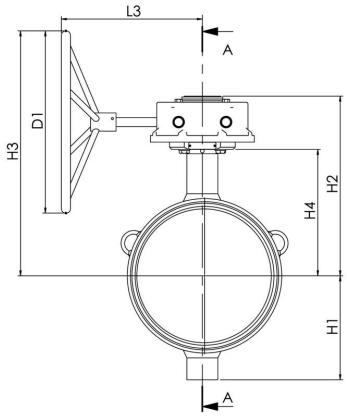

DN 300-800

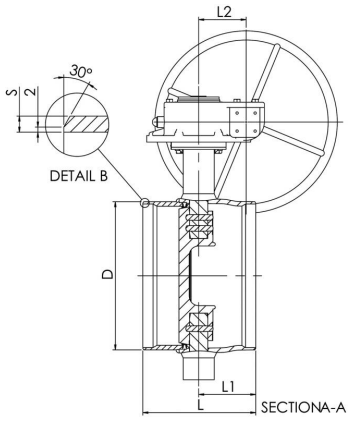

DN	PN	Product no.	D	D1	H1	H2	H3	H4	L	L1	L2	L3	S	kg
300	25	BFS300W2	323.9	400.0	247	432	583	315	270	110	105	331	5.6	82.0
350	25	BFS350W2	355.6	400.0	255	443	593	325	290	134	105	331	5.6	98.0
400	25	BFS400W2	406.4	500.0	285	490	672	347	310	157	130	393	6.3	130.0
450	25	BFS450W2	457	400.0	330	522	654	379	330	153	130	386	6.3	178.0
500	25	BFS500W2	508	400.0	360	551	683	408	350	153	130	386	6.3	213.0
600	25	BFS600W2	610	500.0	440	628	787	450	390	184	140	419	7.1	344.0
700	25	BFS700W2	711	400.0	495	684	784	501	430	203	182	441	8	491.0
800	25	BFS800W2	813	500.0	581	791	948	573	470	226	209	483	8.8	835.0

Copyright © Vexve Oy
All rights reserved.