Shut-off butterfly valves, reduced bore

BRS W2 series, Δp = 25 bar, welding / welding, EN (DIN), DN 900-1400, reduced bore

Body	DN 900-1400 Steel P355NL1 (1.0566) / P355QH1 (1.0571)
Disc	DN 900-1000 Stainless steel, GX5CrNiMo19-11-2 (1.4408)
	DN 1200-1400 Stainless steel, GX2CrNiMoN22-5-3 (1.4470)
Seat	DN 900-1400 1.4542 + HCr plating
Stem	DN 900-1400 Stainless steel, X3CrNiMoN27-5-2 (1.4460)
Stem seal	DN 900-1400 FPM
Bearing	DN 900-1400 PTFE + AISI 316 net
Operation	DN 900-1400 Valve is equipped with manual gear

Operation conditions

Body:	PN 25
Trim:	Δp = 25 bar
Temperature:	-40 °C – +200 °C
	Below 0 °C contact manufacturer
Leakage rate:	A or B (EN 12266-1)
	Depending on requirement

Not for steam

DN 900-1400

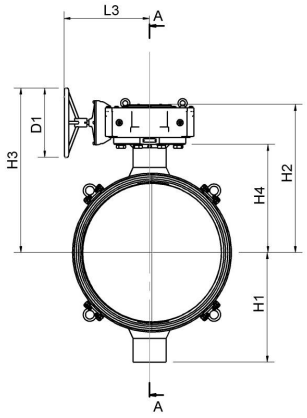

DN 900-1400

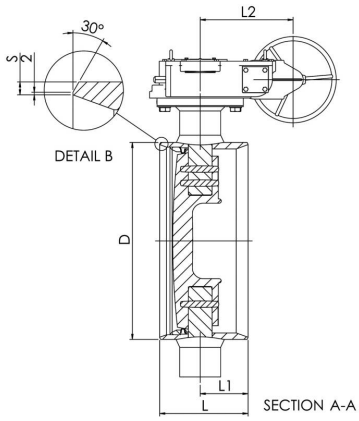

DN	PN	Product no.	D	D1	H1	H2	H3	H4	L	L1	L2	L3	S	kg
900	25	BRS900W2	914	400.0	631	853	948	623	510	221	256	505	10	1120.0
1000	25	BRS1000W2	1016	400.0	678	919	1014	689	550	224	256	506	10	1440.0
1200	25	BRS1200W2	1219	500.0	730	1157	1273	856	580	285	250	632	15	2278.0
1400	25	BRS1400W2	1422	630.0	871	1272	1391	963	600	228	250	636	18	2885.0

Copyright © Vexve Oy
All rights reserved.