Shut-off butterfly valves, full bore

BFS W2/GS series, Δp = 25 bar, welding / welding, GOST, DN 300-800, full bore

Body	DN 300-500 Steel, P235GH (1.0345)
	DN 600-800 Steel P355NL1 (1.0566)
Disc	DN 300-800 Stainless steel, GX5CrNiMo19-11-2 (1.4408)
Seat	DN 300-800 1.4542 + HCr plating
Stem	DN 300-800 Stainless steel, X3CrNiMoN27-5-2 (1.4460)
Stem seal	DN 300-800 FPM
Bearing	DN 300-800 PTFE + AISI 316 net
Operation	DN 300-800 Valve is equipped with manual gear

Operation conditions

Body:	PN 25
Trim:	Δp = 25 bar
Temperature:	-40 °C – +200 °C
	Below 0 °C contact manufacturer
Leakage rate:	A or B (EN 12266-1)
	Depending on requirement

Not for steam

DN 300-800

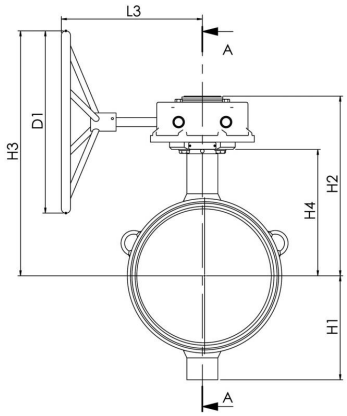

DN 300-800

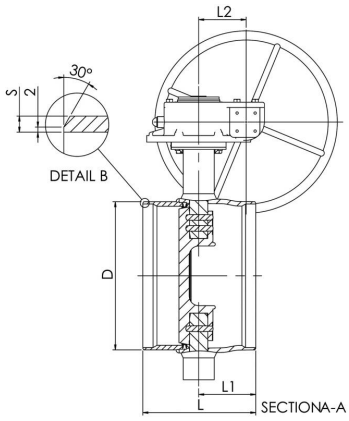

DN	PN	Product no.	D	D1	H1	H2	H3	H4	L	L1	L2	L3	S	kg
300	25	BFS300W2/GS	325	400.0	247	432	583	315	270	110	105	331	7	82.0
350	25	BFS350W2/GS	377	400.0	255	443	593	325	290	134	105	331	8	98.0
400	25	BFS400W2/GS	426	500.0	285	490	672	347	310	157	130	393	8	130.0
450	25	BFS450W2/GS	478	400.0	330	522	654	379	330	153	130	386	8	178.0
500	25	BFS500W2/GS	530	400.0	360	551	683	408	350	153	130	386	9	213.0
600	25	BFS600W2/GS	630	500.0	440	628	787	450	390	184	140	419	11	344.0
700	25	BFS700W2/GS	720	400.0	495	684	784	501	430	203	182	441	12	491.0
800	25	BFS800W2/GS	820	500.0	581	791	948	573	470	226	209	483	12	835.0

Copyright © Vexve Oy
All rights reserved.