Balancing valves, stainless steel, reduced bore

243/25 series, PN 25, flange / flange, DN 65-150, reduced bore

Body	DN 65-150 Stainless steel, X2CrNiMo17-12-2 (1.4404)
Ball	DN 65-150 Stainless steel, X2CrNiMo17-12-2 (1.4404)
Ball seal	DN 65-150 PTFE+GF
Stem	DN 65-150 Stainless steel, X2CrNiMo17-12-2 (1.4404)
Stem seal	DN 65-150 FPM/NBR
Measuring block	DN 65-150 Type Oras, stainless steel, X2CrNiMo17-12-2 (1.4404) / NBR
Operation	DN 65-150 With zinc-plated steel handle
Flanges	EN 1092-1 Available PN 10, 16, 25, 40

Operation conditions

-20 °C – +200 °C
Below -20 °C contact manufacturer
Lowest allowed ambient temperature -40 °C

Leakage rate A (EN 12266-1)

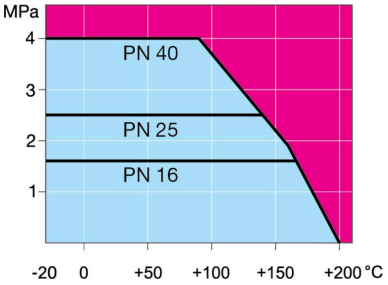

Not for steam

DN 65-150

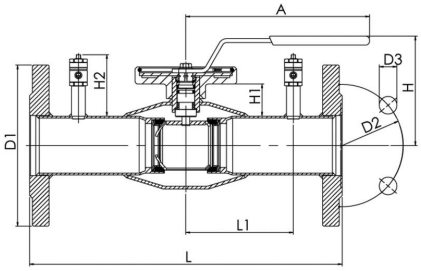

DN	PN	Product no.	A	D1	D2	D3	H	H1	H2	L	L1	kg
65	25	243065/25	280	185.0	145.0	18.0	148	58	82	310	110	10.8
80	25	243080/25	280	200.0	160.0	18.0	160	64	82	310	110	13.5
100	25	243100/25	280	235.0	190.0	22.0	173	52	82	350	122.5	19.5
125	25	243125/25	400	270.0	220.0	26.0	221	68	82	360	137.5	30.8
150	25	243150/25	600	300.0	250.0	26.0	240	74	82	390	150	36.0

Vexve's balancing valves can be found e.g. from libraries of TA-SCOPE and SmartBalancing measuring devices.

Copyright © Vexve Oy
All rights reserved.

Balancing valves, stainless steel, reduced bore

243/25 series, PN 25, flange / flange, DN 200-250, reduced bore

Body	DN 200-250 Stainless steel, X2CrNiMo17-12-2 (1.4404)
Ball	DN 200-250 Stainless steel, X2CrNiMo17-12-2 (1.4404)
Ball seal	DN 200-250 PTFE+GF
Stem	DN 200-250 Stainless steel, X2CrNiMo17-12-2 (1.4404)
Stem seal	DN 200-250 FPM/NBR
Measuring block	DN 200-250 Type Oras, stainless steel, X2CrNiMo17-12-2 (1.4404) / NBR
Operation	DN 200-250 Valve is equipped with manual gear
Flanges	EN 1092-1 Available PN 10, 16, 25, 40

Operation conditions

-20 °C – +200 °C
Below -20 °C contact manufacturer
Lowest allowed ambient temperature -40 °C

Leakage rate A (EN 12266-1)

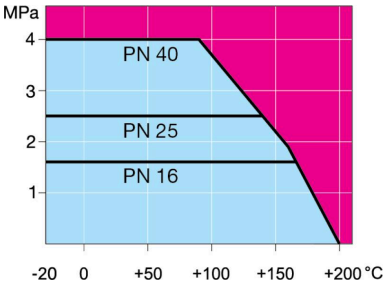

Not for steam

DN 200-300

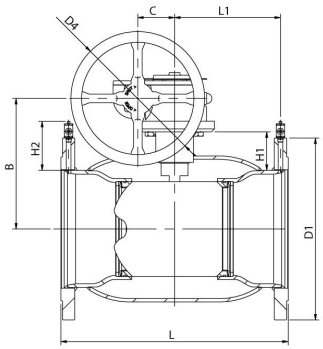

DN 200-300

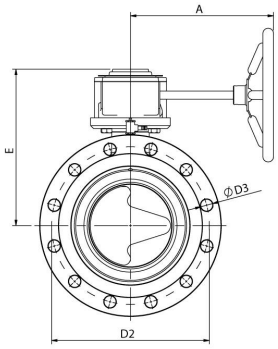

DN	PN	Product no.	A	B	C	D1	D2	D3	D4	E	H	H1	H2	L	L1	kg
200	25	243200/25	268	244	69	360.0	310.0	26.0	250.0	293		72	101	425	195	66.0
250	25	243250/25	301	294	97	425.0	370.0	30.0	300.0	345		88	107	550	256	113.0

Vexve's balancing valves can be found e.g. from libraries of TA-SCOPE and SmartBalancing measuring devices.

Copyright © Vexve Oy
All rights reserved.