Steel ball valves, reduced bore

104/S series, strong, welding / welding, EN (DIN), DN 100-200, reduced bore

Body	DN 100-200 Steel, P235GH (1.0345)
Ball	DN 100-200 Stainless steel, X5CrNi18-10 (1.4301)
Ball seal	DN 100-200 PTFE+C
Stem	DN 100-200 Stainless steel, X8CrNiS18-9 (1.4305)
Stem seal	DN 100-200 FPM
Operation	DN 100-200 Valve is equipped with manual gear

Operation conditions

-20 °C – +200 °C
Below -20 °C contact manufacturer
Lowest allowed ambient temperature -40 °C

Leakage rate A (EN 12266-1)

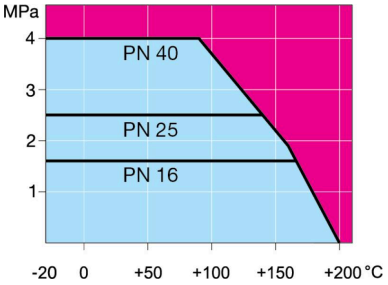

Not for steam

DN 100-200

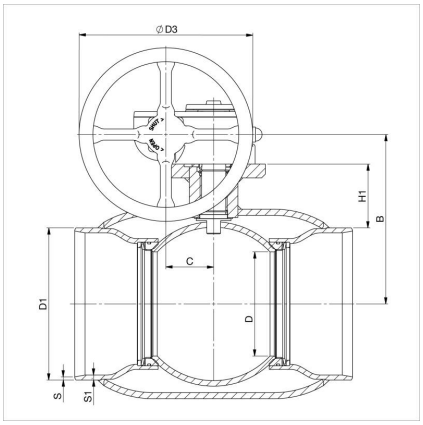

DN	PN	Product no.	A	B	C	D	D1	D2	D3	E	H	L	S	S1	kg
100	25	104100/S	186	196	53	80	114.3	139.7	125.0	239	105	325	3,6	6.3	18.0
125	25	104125/S	224	216	53	100	139.7	177.8	200.0	259	112	325	4	6.3	20.0
150	25	104150/S	224	236	53	125	168.3	219.1	200.0	279	118	350	4.1	7.1	25.0
200	25	104200/S	268	244	69	150	219.1	273.0	250.0	293	92	400	4.5	7.1	49.0

Copyright © Vexve Oy
All rights reserved.