# Shut-off butterfly valves, reduced bore

BRS W1/GS series, Δp = 16 bar, welding / welding, GOST, DN 900-1400, reduced bore

| | |
|---|---|
| Body | DN 900-1400 Steel P355NL1 (1.0566) / P355QH1 (1.0571) |
| Disc | DN 900-1000 Stainless steel, GX5CrNiMo19-11-2 (1.4408) |
| | DN 1200-1400 Stainless steel, GX2CrNiMoN22-5-3 (1.4470) |
| Seat | DN 900-1400 1.4542 + HCr plating |
| Stem | DN 900-1400 Stainless steel, X3CrNiMoN27-5-2 (1.4460) |
| Stem seal | DN 900-1400 FPM |
| Bearing | DN 900-1400 PTFE + AISI 316 net |
| Operation | DN 900-1400 Valve is equipped with manual gear |

## Operation conditions

| | |
|---|---|
| Body: | PN 25 |
| Trim: | Δp = 16 bar |
| Temperature: | -40 °C – +200 °C |
| | DN 1200–1400: -20 °C – +200 °C |
| | Below 0 °C contact manufacturer |
| Leakage rate: | A (EN 12266-1) |

Not for steam

DN 900-1400

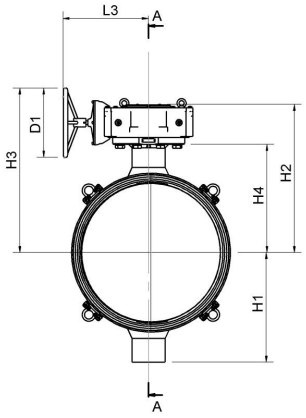


DN 900-1400

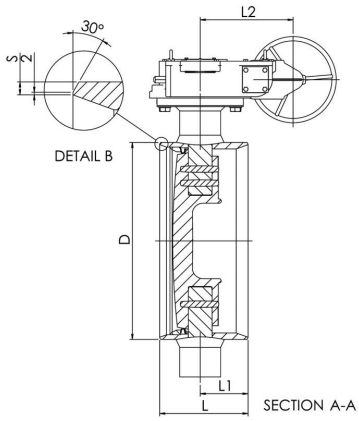


| DN | PN | Product no. | D | D1 | H1 | H2 | H3 | H4 | L | L1 | L2 | L3 | S | kg |
|---|---|---|---|---|---|---|---|---|---|---|---|---|---|---|
| 900 | 16 | BRS900W1/GS | 920 | 400.0 | 631 | 853 | 948 | 623 | 510 | 221 | 256 | 505 | 14 | 1120.0 |
| 1000 | 16 | BRS1000W1/GS | 1020 | 400.0 | 678 | 919 | 1014 | 689 | 550 | 224 | 256 | 506 | 15 | 1440.0 |
| 1200 | 16 | BRS1200W1/GS | 1220 | 500.0 | 730 | 1157 | 1273 | 856 | 580 | 285 | 250 | 632 | 15 | 2278.0 |
| 1400 | 16 | BRS1400W1/GS | 1420 | 630.0 | 871 | 1272 | 1456 | 963 | 600 | 228 | 250 | 636 | 18 | 2885.0 |



Copyright © Vexve Oy
All rights reserved.