Underground ball valves, full bore

welding / welding, EN (DIN), DN 150-400, full bore

Body	DN 150-350 Steel, P235GH (1.0345)
	DN 400 Steel, P355 NL1 (1.0566)/ GP240GH (1.0619)
Ball	DN 150-400 Stainless steel, X5CrNi18-10 (1.4301)
Ball seal	DN 150-400 PTFE+C
Stem	DN 150-400 Stainless steel, X8CrNiS18-9 (1.4305)
Stem seal	DN 150-400 FPM
Top of stem	DN 150-400 Stainless steel, X5CrNi18-10 (1.4301)

Operation conditions

-20 °C – +200 °C
Below -20 °C contact manufacturer
Lowest allowed ambient temperature -40 °C

Leakage rate A (EN 12266-1)

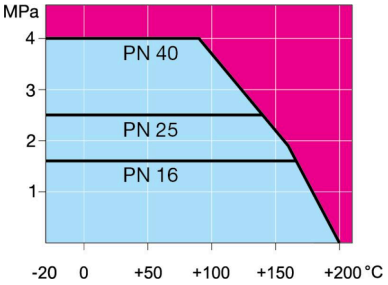

Not for steam

DN 150-400

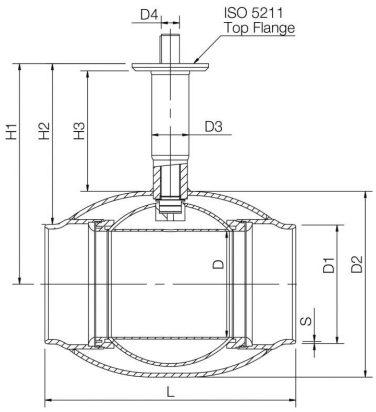

DN	PN	Product no.	D	D1	D2	D3	D4	H1	H2	H3	L	S	kg
150	25	23469405	150	168.3	273.0	76.1	35.0	490	406	334	400	4,5	62.0
200	25	23469505	200	219.1	355.6	76.1	40.0	525	415	327	530	5	105.0
250	25	23469605	250	273.0	457.0	88.9	50.0	580	443	331	550	5	143.0
300	25	23469705	290	323.9	508.0	114.3	50.0	603	440	329	686	5,6	167.0
350	25	23469805	340	355.6	610.0	168.3	70.0	680	502	350	762	6,3	308.0
400	25	23469905	390	406.0	660.0	178.0	90.0	720	516	350	1100	7,1	570.0

Copyright © Vexve Oy
All rights reserved.