Control and shut-off butterfly valves, full bore

BFC W2 series, Δp = 25 bar, welding / welding, EN (DIN), DN 300-800, full bore

Body	DN 300-500 Steel, P235GH (1.0345)
	DN 600-800 Steel P355NL1 (1.0566)
Disc	DN 300-800 Stainless steel, GX5CrNiMo19-11-2 (1.4408)
Seat	DN 300-800 1.4542 + HCr plating
Stem	DN 300-800 Stainless steel, X3CrNiMoN27-5-2 (1.4460)
Stem seal	DN 300-800 Graphite
Bearing	DN 300-800 PTFE + AISI 316 net
Operation	DN 300-800 Valve is equipped with manual gear

Operation conditions

Body:	PN 25
Trim:	Δp = 25 bar
Temperature:	-40 °C – +250 °C
	Below 0 °C contact manufacturer
Leakage rate:	A or B (EN 12266-1)
	Depending on requirement

DN 300-800

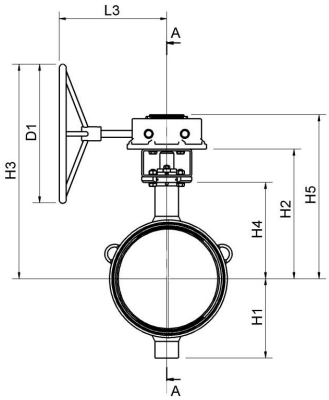

DN 300-800

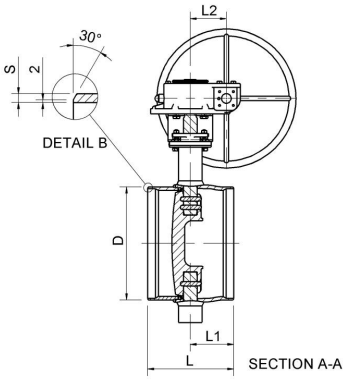

DN	PN	Product no.	D	D1	H1	H2	H3	H4	H5	L	L1	L2	L3	S	kg
300	25	BFC300W2	323.9	400.0	247	435	683	315	537	270	110	105	331	5.6	88.0
350	25	BFC350W2	355.6	400.0	255	445	693	325	547	290	134	105	331	5.6	101.0
400	25	BFC400W2	406.4	500.0	285	467	772	347	590	310	157	130	393	6.3	136.0
450	25	BFC450W2	457	400.0	330	499	754	379	622	330	153	130	386	6.3	183.0
500	25	BFC500W2	508	400.0	360	528	783	408	651	350	153	130	386	6.3	222.0
600	25	BFC600W2	610	500.0	440	575	887	450	728	390	184	140	419	7.1	357.0
700	25	BFC700W2	711	400.0	495	625	884	501	784	430	203	182	441	8	504.0
800	25	BFC800W2	813	500.0	581	733	1068	573	911	470	226	209	483	8.8	864.0

Copyright © Vexve Oy
All rights reserved.