Underground ball valves, reduced bore

107/SL/HG series, welding / welding, EN (DIN), DN 200-300, reduced bore

Body	DN 200-300 Steel, P235GH (1.0345)
Ball	DN 200-300 Stainless steel, X5CrNi18-10 (1.4301)
Ball seal	DN 200-300 PTFE+C
Stem	DN 200-300 Stainless steel, X8CrNiS18-9 (1.4305)
Stem seal	DN 200-300 FPM
Operation	DN 200-300 Valves are available with angle gear, standard hexagon adapter 27 or 32 mm
Top of stem	DN 200-300 Stainless steel, X5CrNi18-10 (1.4301)

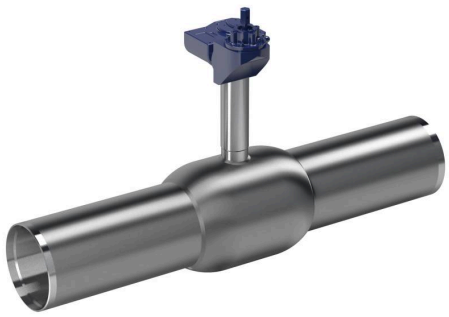

Operation conditions

-20 °C – +200 °C
Below -20 °C contact manufacturer
Lowest allowed ambient temperature -40 °C

Leakage rate A (EN 12266-1)

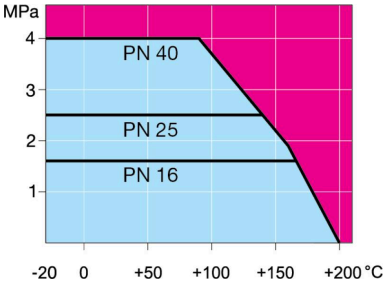

Not for steam

DN 200-300

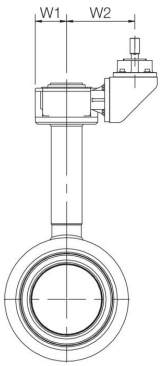

DN 200-300

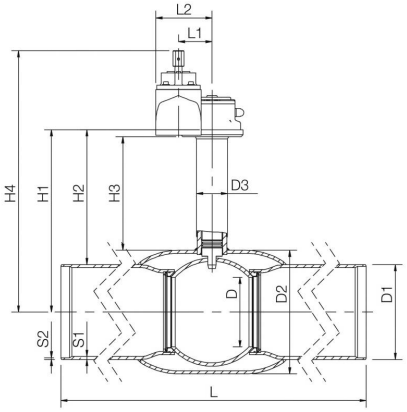

DN	PN	Product no.	D	D1	D2	D3	H1	H2	H3	H4	L	L1	L2	S1	S2	W1	W2	kg
200	25	107200/SL/HG	150	219.1	273.0	76.1	489	380	334	712	1500	84	149	7,1	4,5	81	198	108.0
250	25	107250/SL/HG	200	273.0	355.6	76.1	525	389	327	765	1500	97	162	8,8	5	90	208	155.0
300	25	107300/SE/HG	250	323.9	457.0	88.9	580	418	331	809	1800	138	222	8,8	5,6	141	235	235.0

Copyright © Vexve Oy
All rights reserved.